ABSOLUTE

Innovative Industrial Inc.
185B Durham Street West
Mount Forest, Ontario,
Canada, N0G 2L1

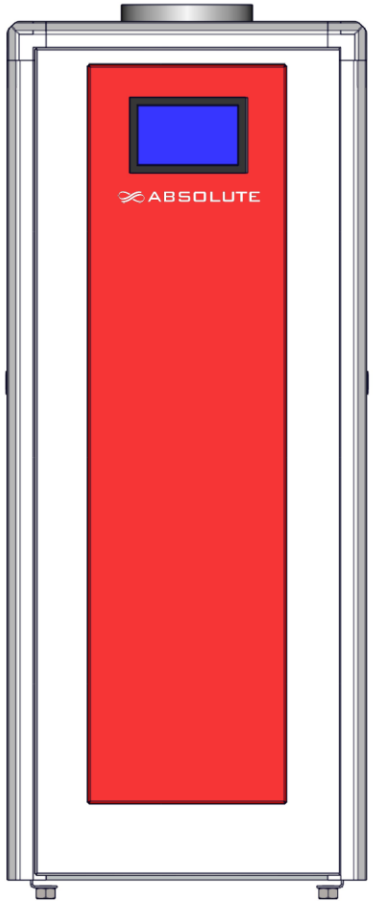

Submittal

ABSOLUTE ABS 750

Gas-Fired Condensing Hot Water Boiler

Project Name	Project Name
Project Location	Location
Contractor	Contractor
Engineering Firm	Engineering firm
Boiler Representative	Representative
Sales Rep. Phone	Rep phone
Date Created	Date

Relief Valve	
Notes	
Code	

Revision

1		Date:	4		Date:
2		Date:	5		Date:
3		Date:	6		Date:

This drawing and the information depicted herein is the property of Innovative Industrial Inc. Copies are issued in strict confidentiality and shall not be reproduced or copied or used as the basis for the manufacture or sale of products without prior written permission from Innovative Industrial Inc.

Physical Dimensions

Absolute ABS Series 750-900-1050

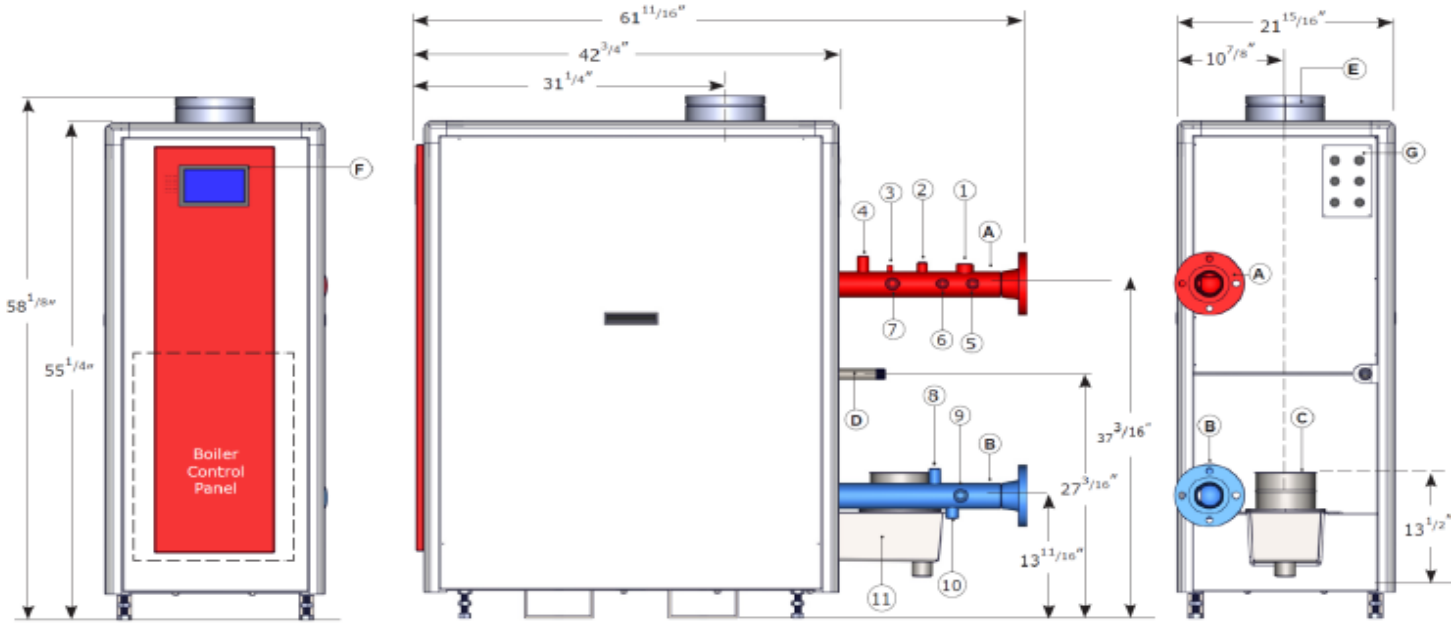

A	Boiler Water Supply	2 1/2" F	D	Gas Connection (NPT male)	1"	G	Wiring Junction	1/2"
B	Boiler Water Return	2 1/2" F	E	Combustion Air Inlet	6" ID	F	Honeywell Touch Screen	7"
C	Boiler Exhaust Connection (ABS1050)	8" ID	C	Boiler Exhaust Connection (ABS750/ABS900)				6" ID

Ref.	Description	Size	Ref.	Description	Size
1	Pressure Relief Valve	1"	7	Aquastat (Manual Reset)	1/2"
2	Flow Switch	3/4"	8	NTC Temperature Sensor (Return Water)	1/2"
3	Air Vent	1/4"	9	Spare	1/2"
4	NTC Temperature Sensor (Supply Water)	1/2"	10	Boiler Drain	3/4"
5	Temperature and Pressure Gauge	1/2"	11	Condensate Drain	1 1/4"
6	Low Water Cut Off (Manual Reset)	3/4"			

Service Clearance

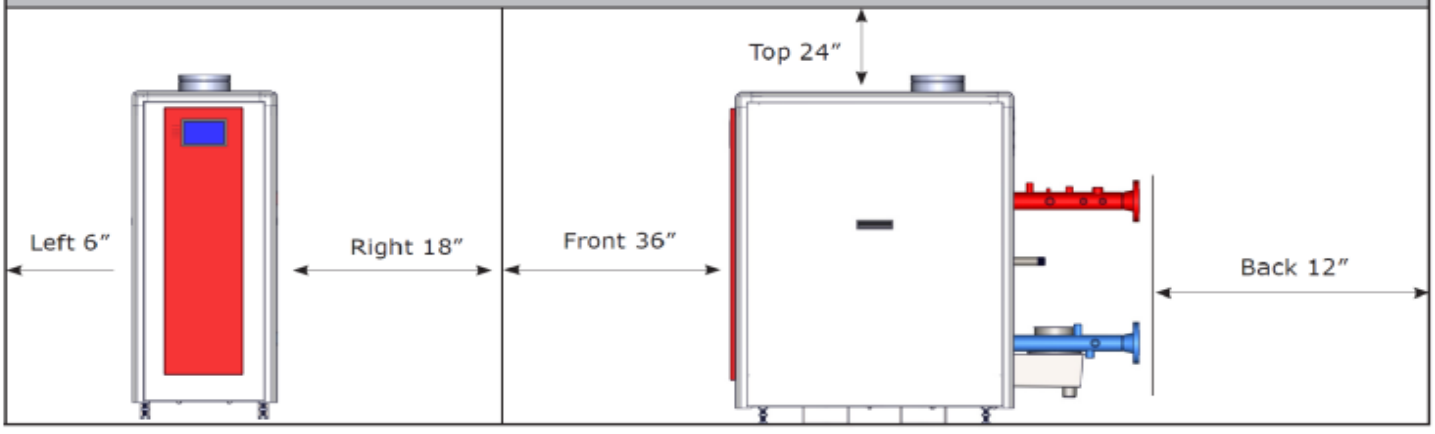

This drawing and the information depicted herein is the property of Innovative Industrial Inc. Copies are issued in strict confidentiality and shall not be reproduced or copied or used as the basis for the manufacture or sale of products without prior written permission from Innovative Industrial Inc.

ABSOLUTE ABS 750

Technical Specifications
Absolute ABS Series 750-900-1050

ABS Model		750	900	1050
Performance Data	**unit**			
Maximum gas input	MBH (KW)	750(230)	900(264)	1050(308)
Minimum gas input	MBH (KW)	75(23)	90(26)	105(31)
AHRI Rated heat output	MBH (KW)	698(205)	838(246)	977(287)
Minimum Heat Output	MBH (KW)	70(21)	84(25)	98(29)
Gross output at 104°F supply / 86 °return (40°C /30°C)	MBH (KW)	709(208)	850(249)	992(291)
Gross output at 176°F supply / 140 °return (80°C /60°C)	MBH (KW)	660(193)	792(232)	924(271)
Boiler horsepower	H.P.	21.7	26.1	30.4
Natural gas combustion efficiency	%	94.5	94.5	94.5
Natural gas thermal efficiency(net)	%	94	94	94
Firing sequence - turndown ratio	Full modulation	10:1	10:1	10:1
General Data				
Heating surface area - water side	$ft^2(m^2)$	18.35(1.705)	22.02(2.05)	25.69(2.39)
Maximum allowable working pressure MAWP	PSIG (Bar)	80(5.5)	80(5.5)	80(5.5)
Water content	Gallons(Liters)	5.9(22.3)	6.6(24.9)	7.3(27.6)
Weight dry	Lbs.(KG)	650(295)	700(318)	750(341)
Shipping weight	Lbs.(KG)	670(304)	720(327)	770(350)
Operating weight	Lbs.(KG)	700(318)	755(343)	810(368)
Boiler operating control			Honeywell Sola R910A	
Touch screen			Honeywell 7" S7999D1006	
Operational Data				
Water Pressure drop at 20°F ΔT	FT. H20 (mbar)	9.75(291.4)	9.65(288.5)	10.80(322.8)
Water Pressure drop at 30°F ΔT	FT. H20 (mbar)	4.33(129.4)	4.39(131.2)	4.87(145.6)
Water Pressure drop at 40°F ΔT	FT. H20 (mbar)	2.436(72.8)	2.413(72.1)	2.718(81.2)
Nominal flow rate 20°F ΔT	GPM (LPM)	75(284)	90(340.5)	105(397.5)
Nominal flow rate 30°F ΔT	GPM (LPM)	48(182)	58(219)	67(253.6)
Nominal flow rate 40°F ΔT	GPM (LPM)	37.5(142)	45(170)	52.5(198.7)
Maximum flow rate	GPM (LPM)	87(326)	104(391)	121(458)
Minimum flow rate at ignition	GPM (LPM)	16.5(62.4)	20(75.7)	23(87)
Maximum supply temperature at 22 PSI minimum	°F (°C)		200(95)	
Normal operating temperature range	°F (°C)		68(20)-194(90)	
Maximum negative draft pressure CAT II	Inch W.C.(mbar)		-0.10(0.25)	
Maximum positive draft pressure CAT IV	Inch W.C.(mbar)		+0.2(0.5)	
Vent / Gas Connections Sizes				
Flue gas vent diameter	Inches(mm)	6"	6"	8"
Combustion air inlet diameter	Inches(mm)	6"	6"	6"
Required combustion air CSA B-149- Forced draft	CFM(LPS)	119(56)	143(67.5)	167(78.8)
Gas inlet diameter	Inches(mm)	1"(25)	1"(25)	1"(25)
Gas inlet pressure range	Inch W.C.(mbar)	3.5-14"(8.8-34.9)	3.5-14"(8.8-34.9)	3.5-14"(8.8-34.9)
Gas inlet pressure range	psi	0.13-0.51	0.13-0.51	0.13-0.51
Venting category			I, IV	
Venting material		Approved UL 1978/ULC 636 - AL-294C, Polypropylene, CPVC		
Electrical data				
Power consumption	Watts	480	600	1200
Electrical main supply	V/P/H		120/1/60- 15A Maximum	
IP-IEC NEMA protection	Rating		IP20 – NEMA Type I	

This drawing and the information depicted herein is the property of Innovative Industrial Inc. Copies are issued in strict confidentiality and shall not be reproduced or copied or used as the basis for the manufacture or sale of products without prior written permission from Innovative Industrial Inc.

STANDARD ACCESSORIES

☑ **Flow switch**	McDonnell Miller flow switch	
☑ **High temperature limit**	Honeywell High temperature manual reset limit	
☑ **Temperature Sensor (supply)**	Sensor for supply temperature monitoring	
☑ **Low water cut-off (Manual Reset)**	McDonnell Miller Low-water cut-off	

☑ **Temperature sensor (return)**	Sensor for return temperature monitoring	
☑ **Safety Valve**	APOLLO safety relief valve	
☑ **Automatic vent**	Automatically vents the air from the circuit	

OPTIONAL ACCESSORIES AND EQUIPMENT

☐ **Combustion air filter**	Installed on Absolute model air inlet to protect from dust and other particles.	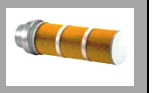
☑ **BACnet Gateway**	Modbus RTU to BACnet Gateway. Supports BACnet/IP, BACnet MS/TP, LonWorks, and Johnson Controls Metasys N2 systems.	
☑ **Outdoor Sensor**	Senses outdoor temperature for reset curve adjustment.	
☐ **DWH Sensor with well**	Sensor for Domestic Hot Water supply from the boiler to a buffer tank or indirect water heater.	

☑ **Local/Remote switch**	Easy selection from locally controlled boiler to the BMS remotely controlled system.	
☑ **Condensate Neutralizing Kit**	Controls condensate PH from the boiler and the vent before it is directed to the floor drain.	
☑ **Automatic reset LWCO**	Automatically completes the circuit when water level is normal	
☐ **Stack Sensor with well included with boiler**	Sensor monitors stack temperature and allows quick diagnosis for maintenance or service	

This drawing and the information depicted herein is the property of Innovative Industrial Inc. Copies are issued in strict confidentiality and shall not be reproduced or copied or used as the basis for the manufacture or sale of products without prior written permission from Innovative Industrial Inc.

ITT Boiler Controls McDonnell & Miller

Low Water Cut-Offs – Electronic For Hot Water and Steam Boilers

Series 751P/752P

GUARDDOG®

- For commercial or industrial applications
- Primary or secondary control on hot water boilers
- Secondary control (manual reset models only) on steam boilers
- Manual reset models meet the requirements of **ASME Standard CSD-1.** If the control is in a low water condition when there is an interruption of power, the control will remain in a low water condition when power is restored. The reset button will need to be pressed when the water level is restored to a level above the probe to allow the burner to fire.

Standard Features

- Green power in on indicating LED
- Red low water indicating LED
- Test button
- No lock out with loss of power if probe is in water
- 20,000 ohms sensitivity

Series 751P/752P

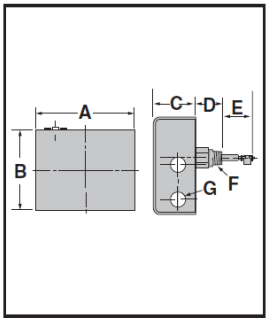

Probe Specifications

Maximum Steam Pressure: 15 psi (1.0 kg/cm²)
Maximum Water Pressure: 160 psi (11.2 kg/cm²)
Maximum Water Temperature: 250˚F (121˚C)

Control Unit

Temperature Ratings:
Storage: -40˚F to 135˚F (-40˚C to 57˚C)
Ambient: 32˚F to 135˚F (0˚C to 57˚C)
Humidity: 85% (non-condensing)
Electrical Enclosure Rating: NEMA 1 General Purpose
Hz: 50/60
Control Power Consumption: 3 VA (max.)

Electrical Ratings

Model	Control Voltage	Switch Contact Rating (Pilot Duty)
752P-MT-24	24VAC	50VA@24VAC Or 125VA@120VAC
752P-MT-U-24		
752P-MT-SP-24		
751P-MT-120	120VAC	
751P-MT-U-120		
751P-MT-SP-120		

Ordering Information

Model Number	Part Number	Description	Weight lbs. (kg)
752P-MT-24	176296	LWCO - 24V w/standard probe	2.5 (1.1)
752P-MT-U-24	176298	LWCO - 24V w/ext. barrel probe ('U')	2.5 (1.1)
752P-MT-SP-24	176297	LWCO - 24V w/short probe ('SP')	2.5 (1.1)
751P-MT-120	176234	LWCO - 120V w/standard probe	2.5 (1.1)
751P-MT-U-120	176214	LWCO - 120V w/ext. barrel probe ('U')	2.5 (1.1)
751P-MT-SP-120	176295	LWCO - 120V w/short probe ('SP')	2.5 (1.1)

Dimensions, in. (mm)

A	B	C	D			E		F	G
			Std.	SP	U	All	U	NPT	
6⅜ (162)	5⅛ (130)	2 9/16 (65)	1 9/16 (40)	3 1/16 (78)	3 1/16 (78)	3 1/16 (78)	2⅛ (54)	¾	¾ (20)

ITT
8200 N. Austin Ave.
Morton Grove, IL 60053
Phone (847)966-3700
Facsimile (847)966-9052
www.mcdonnellmiller.com

This drawing and the information depicted herein is the property of Innovative Industrial Inc. Copies are issued in strict confidentiality and shall not be reproduced or copied or used as the basis for the manufacture or sale of products without prior written permission from Innovative Industrial Inc.

10-600 SERIES
ASME HOT WATER SAFETY RELIEF VALVE

Job Name:	Contractor:
Job Location:	P.O. Number:
Engineer:	Representative:
Tag:	Wholesale Distributor:

DESCRIPTION
ASME Section IV capacity certified bronze safety relief valve for protection of hot water heating boilers, systems and similar equipment.

FEATURES
- ❒ ASME Section IV Certified Capacity
- ❒ 15-160 psig Set Pressures @ 250F max
- ❒ Corrosion Resistant Construction
- ❒ Diaphragm Isolated Spring Chamber
- ❒ High Capacity Option
- ❒ Directive 97/23/EC (PED) Compliance
- ❒ MADE IN THE USA

MATERIALS
Body: ASTM B584 Bronze
Spring: Alloy Steel, plated
Seat: Silicone

Please indicate desired pressure suffix. Otherwise maximum boiler pressure will be supplied.

ORDER NUMBER
MODEL – SUFFIX
EX: 1061407 (3/4" X 1" 40 PSIG SET PRESSURE)

PSIG	*Suffix*	PSIG	*Suffix*	PSIG	*Suffix*
15	*01*	65	*13*	115	*23*
20	*02*	70	*14*	120	*24*
25	*04*	75	*15*	125	*25*
30	*05*	80	*16*	130	*30*
35	*06*	85	*17*	135	*31*
40	*07*	90	*18*	140	*32*
45	*09*	95	*19*	145	*33*
50	*10*	100	*20*	150	*34*
55	*11*	105	*21*	155	*35*
60	*12*	110	*22*	160	*36*

CAPACITIES, BTU/Hr

Standard Discharge Port					
PSIG	**¾" 10604**	**1" 10605**	**1-1/4" 10606**	**1-1/2" 10607**	**2" 10608**
30	827000	1339000	2316000	3151000	5193000
150	3116000	5044000	8725000	11871000	19565000

Oversized Discharge Port (High Capacity)					
PSIG	**¾" 10614**	**1" 10615**	**1-1/4" 10616**	**1-1/2" 10617**	**2" 10618**
30	970000	1570000	2716000	3696000	6091000
150	3655000	5916000	10234000	139230000	229470000

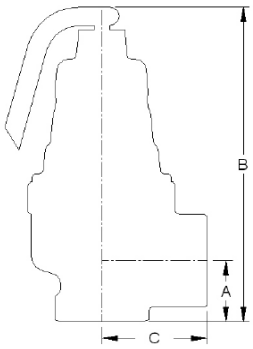

DIMENSIONS

MODEL #	SIZE, FNPT x FNPT	A	B	C
10604	3/4 x 3/4	1.03	5.25	1.70
10614	3/4 x 1	(26)	(134)	(43)
10605	1 x 1	1.25	6.69	2.00
10615	1 x 1-1/4	(32)	(170)	(51)
10606	1-1/4 x 1-1/4	1.25	8.38	2.44
10616	1-1/4 x 1-1/2	(32)	(213)	(62)
10607	1-1/2 x 1-1/2	2.00	10.75	2.75
10617	1-1/2 x 2	(51)	(273)	(70)
10608	2 x 2	2.19	14.00	3.69
10618	2 x 2-1/2	(56)	(356)	(94)

All dims in inches (mm)

APPROVALS
Canadian Registration Number 0G8547.5C

Conbraco Industries, Inc. 701 Matthews Mint Hill Rd. Matthews NC 28105 USA ; www.conbraco.com ; 704-841-6000
This specification is provided for reference only. Conbraco reserves the right to change any portion of this specification without notice and without incurring obligation to make such changes to Conbraco products previously or subsequently sold.

This drawing and the information depicted herein is the property of Innovative Industrial Inc. Copies are issued in strict confidentiality and shall not be reproduced or copied or used as the basis for the manufacture or sale of products without prior written permission from Innovative Industrial Inc.

Honeywell

L4006,7,8; L6006,7,8 Aquastat® Controllers

PRODUCT DATA

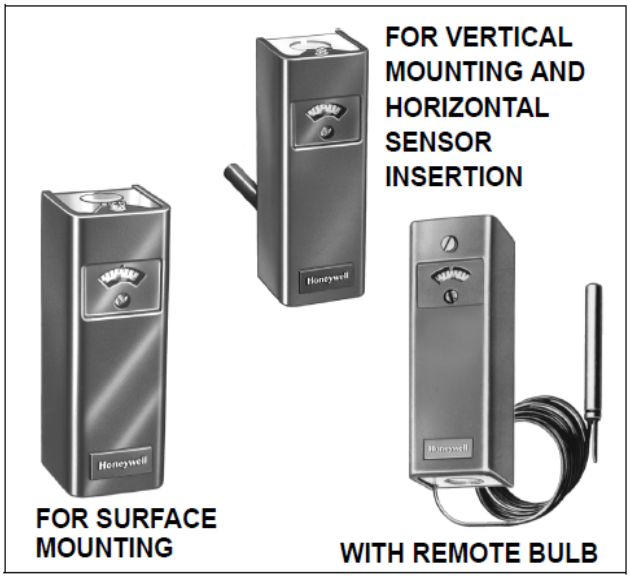

GENERAL

Aquastat® Controllers are immersion type devices for limiting or regulating the temperature of liquids in boilers, storage tanks, and other applications where temperature control is required.

FEATURES

- L4006, 7, and 8 provide Spst switching for high or low limit or circulator control.
- L4006G includes two Spst switches that provide high limit and circulator control.
- L4006,7; L6006,7 models are available for insertion in: vertical or horizontal immersion well, vertical or horizontal direct immersion, and surface mounting.
- L4008, L6008 include remote bulb for mounting controller at a location away from the sensing element.
- Totally enclosed Micro Switch™ snap-acting switches operate on temperature rise to set point.
- Models calibrated for high limit use are also suitable for low limit control if a separate high limit controller is used.
- Visible control point scale and external adjustment screw, permit easy setting.
- Remote bulb models may be used to sense air temperature in ducts and in outside air sensing applications.

This drawing and the information depicted herein is the property of Innovative Industrial Inc. Copies are issued in strict confidentiality and shall not be reproduced or copied or used as the basis for the manufacture or sale of products without prior written permission from Innovative Industrial Inc.

SPECIFICATIONS

IMPORTANT

The specifications given in this publication do not include normal manufacturing tolerances. Therefore, this unit may not exactly match the listed specifications. Also, this product is tested and calibrated under closely controlled conditions, and some minor differences in performance can be expected if those conditions are changed.

SUPER TRADELINE®/TRADELINE MODELS

SUPER TRADELINE controls offer features not available on TRADELINE or standard models, and are designed to replace a wide range of Honeywell and competitive controls.

TRADELINE models are selected and packaged to provide ease of stocking, ease of handling, and maximum replacement value. Specifications of SUPER TRADELINE and TRADELINE controls are the same as those of standard models except as noted below.

SUPER TRADELINE Model: L6006A Aquastat Controller.

SUPER TRADELINE Features:
SUPER TRADELINE package with cross reference label and special instructions.
Factory-set stop at 240° F (116° C).
Vertical or horizontal mount.
Tube of heat-conductive compound.
Insulation: 1-1/2 in. to 3 in. (38 mm to 76 mm).

TRADELINE Models: L4006A,B,E; L4008E; L6006C; L6008A Aquastat Controllers.

TRADELINE Features Available:
TRADELINE package with cross reference label and special instructions.
Some TRADELINE models include immersion well.
Factory-set stops at 180° F, 240° F, or 250° F (82° C, 116° C, or 121° C).
Vertical or horizontal mount.
Tube of heat-conductive compound.
Insulation depths of 1-1/2 in. or 3 in. (38 or 76 mm).

NOTE: The following specifications are standard. Variances, available as options, are listed in Tables 1 and 2.

Electrical Ratings (A):
Models with 2° F (1° C) fixed differential:

	120 Vac	240 Vac
Full Load	2.6	1.3
Locked Rotor	15.6	7.8

Models with 5° F (3° C) fixed differential or 5° F to 30° F (3° C to 17° C) adjustable differential:

	110/120 Vac	200/240 Vac	277 Vac[a]
Full Load	8.0	5.1	4.2
Locked Rotor	48.0	30.6	25.2
Millivoltage	0.25 at 0.25 to 12 Vdc		

[a] L6008G only.

Switching:
L4006, L4007, L4008: Spst.
L6006, L6007, L6008: Spdt (breaks R-B and makes R-W on temperature rise at setpoint).

Pressure Rating:
Capillary Bulb (Direct Immersion): 200 psi (1379 kPa).
Immersion Well: 255 psi (1758 kPa).

Sensing Bulb Material: Copper.

Sensing Bulb Fill: Liquid—toluene or silicone oil.

Sensing Bulb Dimensions: 2-7/8 in. (73 mm) long, 3/8 in. (10 mm) diameter.

Wiring: Screw terminals.

Maximum Ambient Temperature: 150° F (66° C).

ORDERING INFORMATION

When purchasing replacement and modernization products from your TRADELINE® wholesaler or distributor, refer to the TRADELINE® Catalog or price sheets for complete ordering number.

If you have additional questions, need further information, or would like to comment on our products or services, please write or phone:

1. Your local Honeywell Automation and Control Products Sales Office (check white pages of your phone directory).
2. Honeywell Customer Care
   1885 Douglas Drive North
   Minneapolis, Minnesota 55422-4386

In Canada—Honeywell Limited/Honeywell Limitée, 35 Dynamic Drive, Scarborough, Ontario M1V 4Z9.
International Sales and Service Offices in all principal cities of the world. Manufacturing in Australia, Canada, Finland, France, Germany, Japan, Mexico, Netherlands, Spain, Taiwan, United Kingdom, U.S.A.

This drawing and the information depicted herein is the property of Innovative Industrial Inc. Copies are issued in strict confidentiality and shall not be reproduced or copied or used as the basis for the manufacture or sale of products without prior written permission from Innovative Industrial Inc.

ABS750 Submittal 09/2017- RV2

Approvals:
Underwriters Laboratories Inc:
Remote bulb devices and well-mounted devices shipped without well are component recognized: File No. MP466, Guide No. MBPR2.
L4006A shipped with well, L4006G, L4007A,B; L6006C for surface mounting, L6006B for direct immersion mounting, and L6007A are listed: File No. MP466, Guide No. MBPR.
L6008G is listed: File No. E4436, Guide No. XAPX.
Canadian Standards Association: File No. LR1620, Guide No. 400-E-O.

ANSI Miswiring: Models with 1/4 in. (6.35 mm) tab terminal meet ANSI Appliance Miswiring Standard.

Mounting:
Horizontal and vertical models mount directly to an immersion well installed in a boiler fitting. L4006H and L6006C contain a bracket and clamp for surface mounting on the pipe or tank. Remote bulb models have three mounting holes in rear of case for screw mounting to a vertical surface. The L6006B direct immersion model also mounts directly to a boiler fitting.

Finish: Gray.

Dimensions:
Installation: (See Figures 1, 2, and 3).
Immersion Well: (See Fig. 4).
Boiler Fitting and Bulb: (See Fig. 5).

Accessories and Parts:
137536A Scale Lock Assembly: Includes one 137536-767 Scale Lock and one 80844C-767 Screw, No. 3-48 x 3/16 (5 mm).
Q615A1004 Weatherproof Enclosure (for remote bulb devices only).
107408 Heat-Conductive Compound (4-oz. can).
104488 Spring Clip (stainless steel).
124904 Well Adapter.
Immersion Well Assemblies and Compression Fittings: See form no. 68-0040, Wells and Fittings for Temperature Controllers, for list and ordering information.

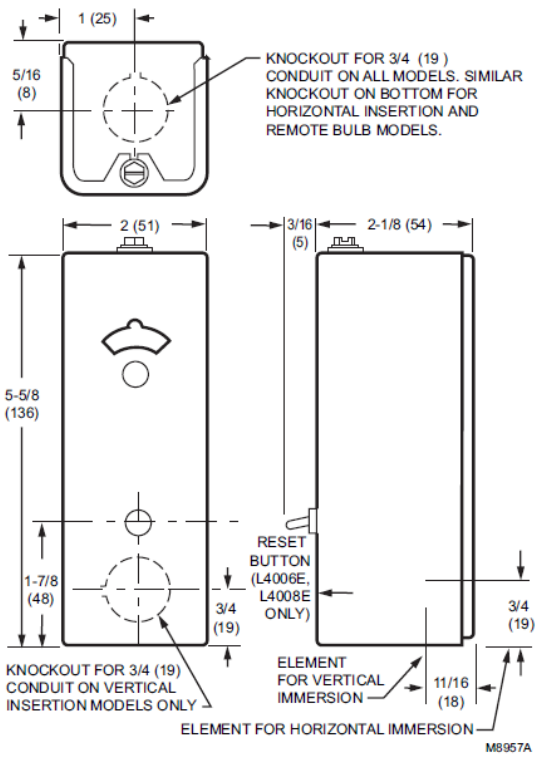

Fig. 1. Approximate case installation dimensions in inches (mm) for direct insertion models.

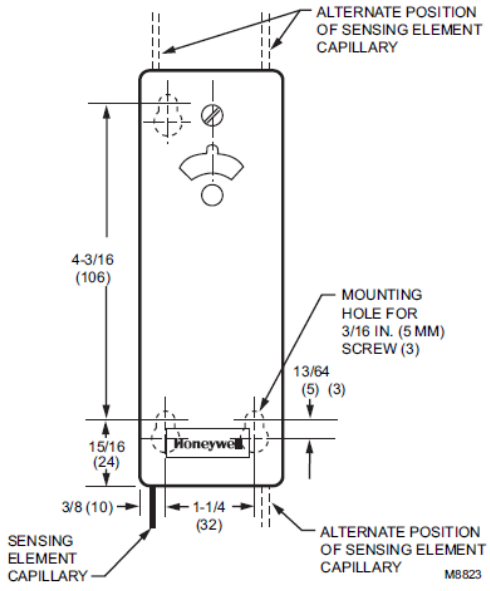

Fig. 2. Approximate installation dimensions in inches (mm) for remote bulb models. Other dimensions are the same as Fig. 1.

This drawing and the information depicted herein is the property of Innovative Industrial Inc. Copies are issued in strict confidentiality and shall not be reproduced or copied or used as the basis for the manufacture or sale of products without prior written permission from Innovative Industrial Inc.

PRESSURE/TEMPERATURE GAUGE

Rear or Lower Connection

The Miljoco Models PB3008L & PB3008 dual indicating pressure/temperature gauges, or commonly referred to as "tridicators", combine the value of an individual pressure gauge and thermometer in one instrument. They are the ideal choice for boilers and other hot water applications where space limitations and installation costs are a consideration. These instruments contain both a bourdon tube assembly to indicate pressure, and a bimetal coil assembly to indicate temperature in both Fahrenheit and Celsius. ***WARNING: Not suitable for steam service.***

PB3008L

General Specifications

CASE: Drawn steel, black finished.
RING: Crimped drawn steel, black finished.
LENS: Glass.
DIAL: Aluminum, white finished with red temperature and blue pressure markings.
POINTERS: Aluminum, black non-adjustable.
MOVEMENT: Brass.
BOURDON TUBE: Phosphor bronze.
CONNECTION: See table below.
STEM: Brass, Ø 0.320".
ACCURACY: Pressure scale: ±3-2-3%, Temperature scale: ±One scale division.
AMBIENT TEMPERATURE: -40 to 250°F (-40 to 120°C).

Dimensions (in.)

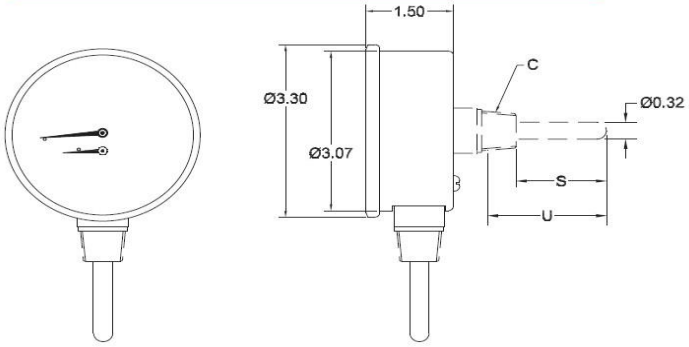

Model	Outlet	Stem/Connection Size* Code	Size (C)	U	S
PB3008	Back	1-25	¼" NPT	1.32	1.00
		2-25	¼" NPT	3.23	2.98
		2-50	½" NPT	3.00	2.60
		2-25E	¼" NPT w/Ext.	1.32	1.00
PB3008L	Bottom	2-50	½" NPT	2.80	2.36

**Other stem length and connections available - consult factory.*

Ranges

Code	Pressure Range	Temperature Range	psi Scale Fig.	psi Scale Div.	kPa Scale Fig.	kPa Scale Div.	°F Scale Fig.	°F Scale Div.	°C Scale Fig.	°C Scale Div.
04	0-60 psi/ 0-400 kPa	50 to 290°F/ 10 to 140°C	10	2	100	20	40	5	20	2
21	0-75 psi/ 0-500 kPa	50 to 290°F/ 10 to 140°C	15	2.5	100	20	40	5	20	2
05	0-100 psi/ 0-700 kPa	50 to 290°F/ 10 to 140°C	25	5	250	25	40	5	20	2
07	0-200 psi/ 0-1400 kPa	50 to 290°F/ 10 to 140°C	50	10	500	50	40	5	20	2

To Order

~~PB3008~~ ~~07~~ - ~~2-50~~

Model Number *Range Code* *Stem/Connection Size*

200 Elizabeth St. Mt. Clemens, MI 48043
Ph: 888.888.1498 Fax: 586.777.7891 www.miljoco.com

This drawing and the information depicted herein is the property of Innovative Industrial Inc. Copies are issued in strict confidentiality and shall not be reproduced or copied or used as the basis for the manufacture or sale of products without prior written permission from Innovative Industrial Inc.

Honeywell

S7999D SOLA
Operator Interface Display

PRODUCT DATA

APPLICATION

The S7999D is microprocessor-based color touch-screen Operator Interface (OI) display that provides an operator interface for monitoring and configuring parameters in the Sola Hydronic Control and Sola Steam Control system.

The S7999D can be used to monitor an individual boiler but is also used for multiple boiler applications in a lead/lag arrangement. It consists of 2 RS485 ports (COM 1 & COM 2) and USB port. The S7999D display can be flush front or behind mounted into a panel cutout. Wiring connections to the S7999D are through a removable 8-pin wiring connector.

FEATURES

- **Individual boiler status, configuration, history and diagnostics**
- **Allows configuration and monitoring of the Sola Controls (R7910 Hydronic Controls or R7911 Steam Control) burner control sequence, flame signal, diagnostics, historical files, and faults**
- **Allows switching view between multiple boilers and lead-lag master/slaves**
- **Real-time data trending analysis and transferring saved trend data to Excel spreadsheet**
- **7" 800 x 480, 24 bit high resolution color LCD touch screen for clarity**
- **Audio output with integral speaker for sound output.**
- **Adjustable backlight control**
- **Real time clock with coin-cell battery back up (CR2032)**
- **Volume control**
- **Screen Capture function to capture screen images**
- **USB port for file transfers and software updates**
- **2 RS-485 (COM1 & 2) ports for Modbus™ interface to Sola controls and BAS Gateway.**
- **Windows® CE 6.0 Operating System**
- **8-pin connector, back-up battery and mounting hardware are provided**

PREFACE

This User Guide is intended to provide a general overview of the S7999D Operator Interface (OI) Displays. It is intended to guide you through the features and operation of the OI Display as you interface with the R7910 or R7911 Sola control and establish the Parameter points of the system.

Note that this sheet shows all parameters. The actual product may have parameters made invisible or Read Only by Honeywell as they may not apply to the application.

SPECIFICATIONS

Electrical Ratings:
Input Voltage: 18 – 30 Vac (24Vac nominal), 50/60 Hz
Input Current: 500 mA max
Power consumption: 12W max

Operating Temperature: -4 to 158 °F (-20 to 70 °C)

Storage/Shipping Temperature: -22 to 176 °F (-30 to 80 °C)

Humidity: 90% RH, non condensing

Enclosure rating: IP10 / NEMA 1

Approvals:
FCC Part 15, Class A Digital Device
Underwriter's Laboratories, Inc. (UL) (cUL) Component Recognized (for non-continuous operation): File Number MH17367 (MJAT2, MJAT8).

Dimension: See Fig. 1

This drawing and the information depicted herein is the property of Innovative Industrial Inc. Copies are issued in strict confidentiality and shall not be reproduced or copied or used as the basis for the manufacture or sale of products without prior written permission from Innovative Industrial Inc.

R7910A SOLA HC (HYDRONIC CONTROL) R7911 SOLA SC (STEAM CONTROL)

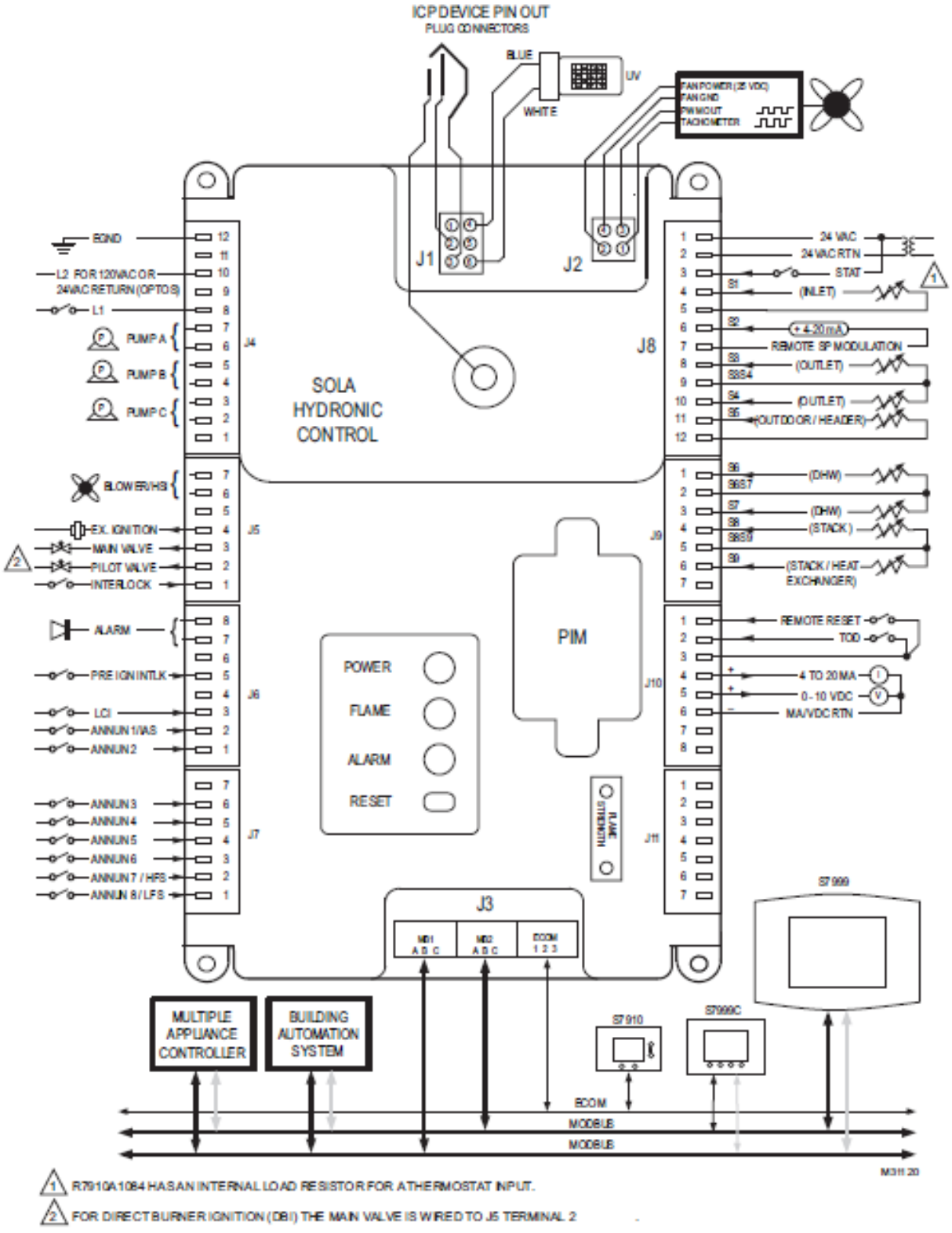

1. R7910A1084 HAS AN INTERNAL LOAD RESISTOR FOR A THERMOSTAT INPUT.
2. FOR DIRECT BURNER IGNITION (DBI) THE MAIN VALVE IS WIRED TO J5 TERMINAL 2

This drawing and the information depicted herein is the property of Innovative Industrial Inc. Copies are issued in strict confidentiality and shall not be reproduced or copied or used as the basis for the manufacture or sale of products without prior written permission from Innovative Industrial Inc.